P Papalambros

DESIGN FOR ASSEMBLY

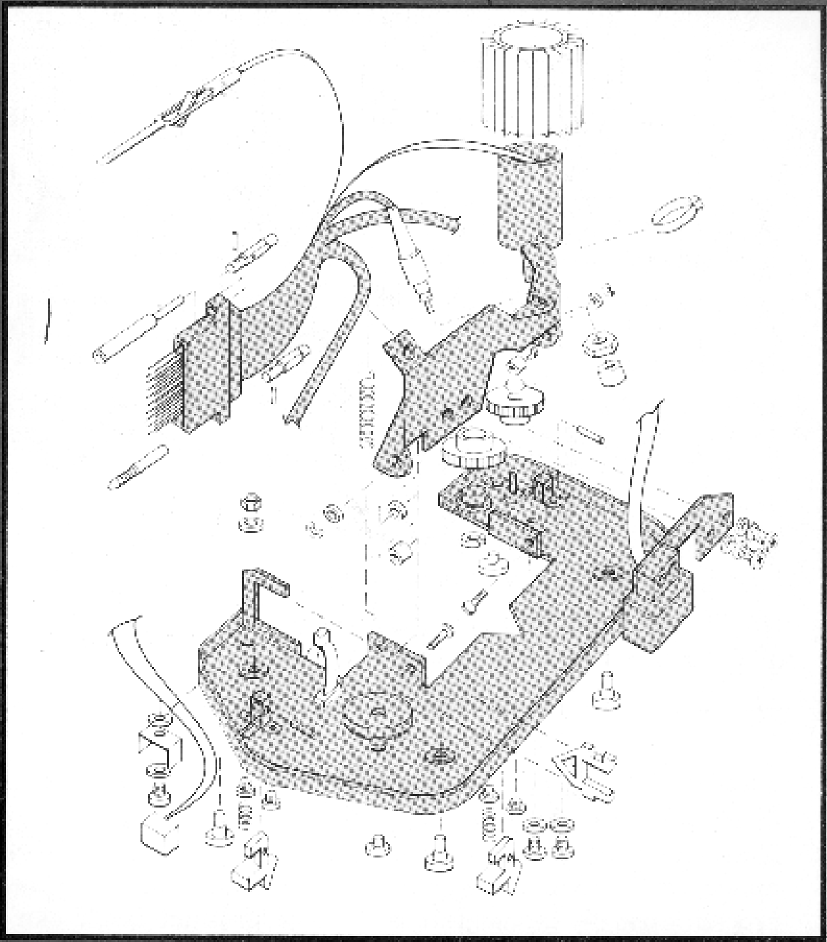

Old design — 77 parts

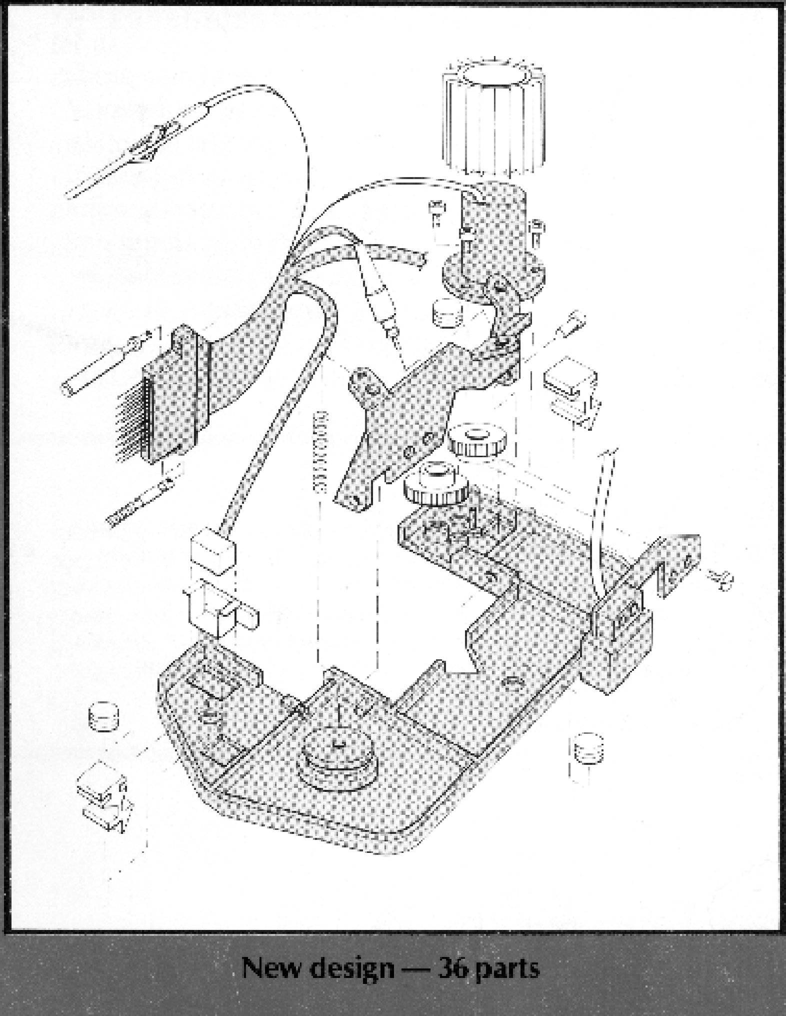

New design — 36 parts

- Selecting the right method
- Manual assembly
- Automatic assembly
- Robot assembly & software systems

A series of four articles by:
G. Boothroyd, Professor
P. Dewhurst, Professor
University of Massachusetts

MACHINE DESIGN

DESIGN FOR ASSEMBLY: SELECTING THE RIGHT METHOD

Surprisingly, the least costly assembly method can be identified early in the design stage. If the product is then designed for that process, manufacturing cost can drop 20 to 40% and assembly productivity rise 100 to 200%.

GEOFFREY BOOTHROYD
Professor
PETER DEWHURST
Professor
University of Massachusetts
Amherst, MA

Design is the first stage of manufacturing. It is here that manufacturing costs are largely determined. In addition, the assembly process is usually the single most important process contributing to both manufacturing costs and labor requirements.

When productivity improvements are sought, design for ease of assembly must be given the highest priority. Indeed, even when automated assembly is considered, one must determine whether the design of the product lends itself to such automation. This is particularly true in such high-technology batch-production industries as computer hardware.

Recent studies of computer-related products have shown that reductions of 20 to 40% in manufacturing cost and increases of 100 to 200% in assembly productivity are readily obtainable through proper consideration of assembly at the design stage. For example use of design-for-assembly techniques could save Xerox Corp. an estimated $150 million per year.

Savings like these can be realized with simple techniques for analyzing even rough designs and predicting assembly costs. The first step in these techniques is to identify the assembly process that is most likely to be economic for a particular product. Then the product itself can be designed for that particular process.

The reason that early process selection is important is that manual assembly differs widely from automatic assembly in the requirements it imposes on product design. An operation that is easy for a person may be impossible for a robot or special-purpose workhead, and operations that are easy for machines may be difficult for people.

Surprisingly, detailed knowledge of product design is not required to make a good estimate of the most economical assembly process. Essentially, what must be known is projected market life, number of parts, projected production volume, and company investment policy.

Process characteristics

The cost of assembling a product is related both to the design of the product and to the assembly process used for its production. Assembly cost is lowest when the product is designed so that it can be economically assembled by the most appropriate process. The three basic processes are manual assembly, special-

Cutting parts and cost

The twin objectives of design-for-assembly studies are to reduce the number of parts in a product and to increase the ease of assembling the remaining parts. In the example shown here, a reciprocating mechanism from a hand power saw, the number of parts was reduced from 41 to 28 and assembly time from 409 to 215 seconds. The time savings cut assembly cost by $0.95, but what purpose machine assembly, and programmable-machine assembly.

In manual assembly (MA on the accompanying chart), the tools required are generally simpler and less costly than those employed on automatic assembly machines, and the downtime caused by defective parts is usually negligible. Cost of manual assembly is relatively constant and independent of production volume. Manual processes also have considerable flexibility and adaptability. In some instances it is economical to provide the assembler with mechanical assistance (MM) in order to reduce assembly time.

Special-purpose assembly machines are those that have been built to assemble a specific product. They consist of transfer devices with single-purpose workheads and parts feeders at the various workstations. The transfer devices can operate on an indexing (synchronous) principle (AI) or on a free-transfer (nonsynchronous) principle (AF).

These special-purpose machines are costly and require considerable engineering development before they can be put into service. Downtime caused by defective parts can be a serious problem unless the parts have

surprises most engineers is that parts cost was reduced as well — by $1.28 in this instance. Equal or greater savings in parts costs are typical of the design specifications achieved by deliberate design for assembly.

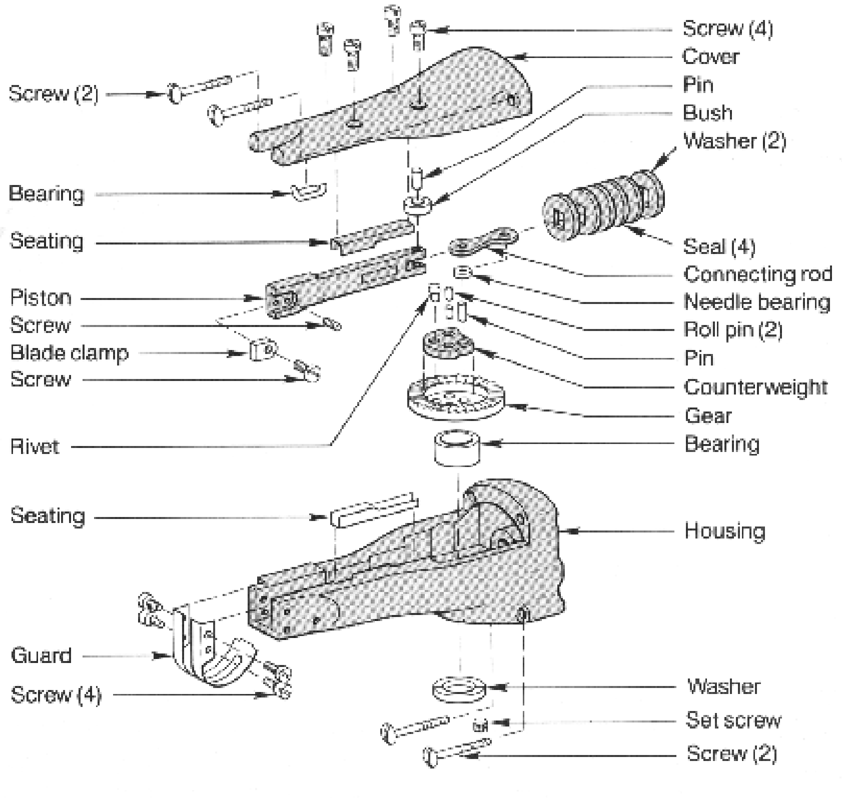

OLD DESIGN — 41 PARTS

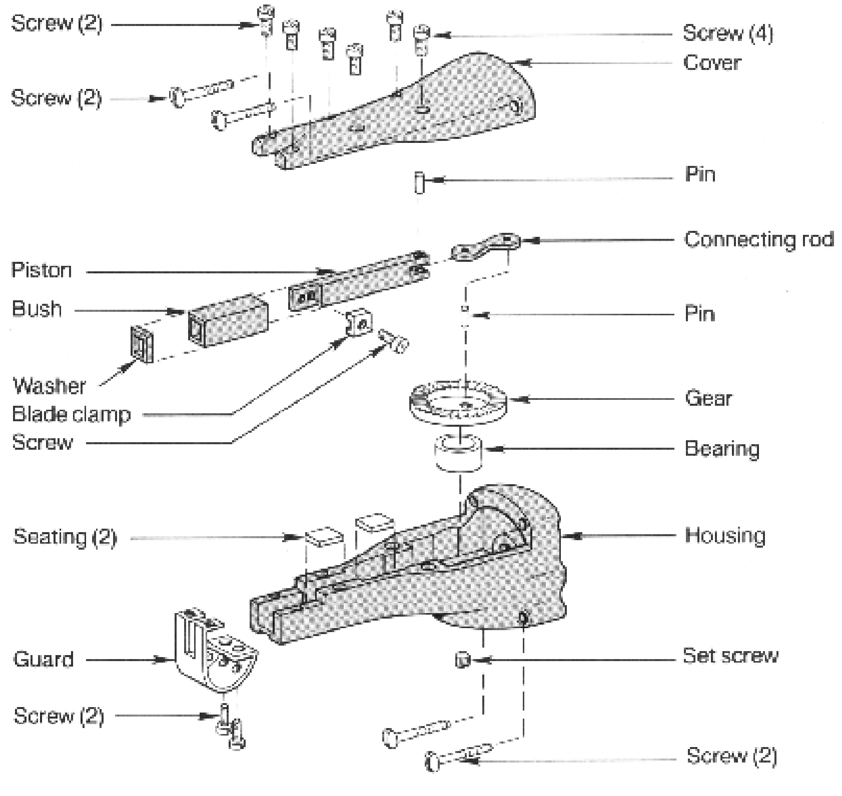

NEW DESIGN — 28 PARTS

relatively high quality. Also, special-purpose machines work on a fixed cycle time, with a fixed rate of production. If they are underutilized they cannot be used for any other purpose, resulting in a marked increase in assembly cost.

Programmable assembly machines are similar to the nonsynchronous special-purpose machines except that the workheads are general-purpose and programmable. This arrangement (AP) allows more than one assembly operation to be performed at each workstation. It also provides for considerable flexibility in production volume and greater adaptability to design changes and different product styles.

For lower production volumes, robotic assembly with a single robot workstation may be preferable. Here, two robot arms normally work interactively at the same work fixture (AR).

For the latter two systems, parts are normally made available at workstations in manually loaded magazines. Parts feeders like those employed for machine assembly are usually too costly.

Selecting a process

The method for assessing the available processes is summarized in the accompanying chart. The chart is based on an analysis of mathematical models of the various assembly processes. Using the chart requires that six basic facts be known:

- Production volume per shift
- Number of parts in an assembly
- Single product vs variety of products
- Number of parts required for different styles of the product
- Number of major design changes expected during product life
- Company policy on investment in labor-saving machinery

The production volume per shift and number of parts in an assembly determine the correct row in the chart. The other factors determine the correct column.

The box at the intersection of row and column describes the most economical assembly process. Processes in parentheses are no more than 10% less economical than the primary process in the box.

White boxes indicate low-cost assembly, light-colored boxes medium-cost assembly, and dark boxes expensive assembly.

By varying the basic information about the product and observing how each variation affects the box selected, one can see which factors have the greatest influence on the assembly process.

Several cautions should be observed in using this chart. The numbered comments that follow correspond to the "notes" called out in the chart.

1. Defective parts can cause severe problems in automatic assembly machines by jamming feeding devices, preventing workhead operation, or spoiling an otherwise acceptable assembly. These defective parts could be screws without threads, chipped or discolored parts, parts out of tolerance, pieces of swarf, or any foreign items in the feeding devices of the assembly machine. Automation is unlikely to be successful if the proportion of defective parts is greater than about 2%.

2. Automatic assembly machines produce a steady output of assemblies. Therefore, significant fluctuations in demand, such as may occur with sports equipment, must be accommodated by stockpiling. The cost of stockpiling may rule out automatic assembly for some products.

3. On automatic assembly machines, different product styles can be accommodated by arranging alternative parts at the workstation. Instructions are then given to the machine as to which part should be inserted. For example, in a three-part assembly with two alternatives for each part, eight product styles could be produced.

4. For the purposes of this analysis, one design change means a change that will require a new feeding device and workhead on an automatic assembly machine.

5. An important factor in considering investment in automation equipment is the company investment factor, R_i. The larger the number of shifts worked and the higher the figure for economical investment to replace each operator, the greater the opportunity for automation.

Using the chart

To see how this chart works in practice, consider a product assembled from 35 parts. It is to be manufactured in ten different styles, obtained by having one alternative for each of ten of the parts in the assembly.

Ten major design changes will probably take place during the first three years of product life. Each design change will require a new feeding and orienting device and a new workhead if automatic assembly is used. Expected annual production is 1,000,000 units, 500,000 per shift.

As a matter of company policy, the amount that can be spent on an item of automation equipment that will do the work of one operator on one shift is $40,000. This figure allows for the purchase of the equipment and all engineering and debugging necessary before it is fully operational in the plant. The annual cost of one assembly operator is estimated to be $20,000, including overhead.

In this example, the annual volume per shift, V_s, is 500,000 and the number of parts in the assembly, N_a, is 35, so Row 3 is selected.

Because this is a single product with a market life greater than three years, the choice of columns is restricted to Columns 0

This article is largely based on the *Design for Assembly Handbook*, which has been developed by Boothroyd and Dewhurst at the University of Massachusetts. The handbook is available from Automatic Assembly Program, Department of Mechanical Engineering, U. of Mass., Amherst, MA 01003, tel. (413) 545-0054.

CHOICE OF ASSEMBLY METHOD

			0	1	2	3	4	5	6	7	8	9
			$N_p = 1$ Single product has a market life of three years or more without significant variations in demand; manual fitting of any of the parts is not necessary and the proportion of defective parts is less than 2%. See notes 1 and 2.								A variety of different but similar products, no manual fitting required and less than 2% defective parts.	Variety of products, manual fitting of some parts necessary, fluctuations in demand or low investment potential.
			$N_i < 1.5\ N_a$ Number of parts needed to build different product styles less than 1.5 times the number of parts in the assembly (3). AND $N_d < 0.5\ N_a$ Fewer than half of the parts will be subjected to major redesign during the product market life (4).				$N_i \geq 1.5\ N_a$ More than 50% extra parts are needed to build the range of different product styles (3). OR $N_d \geq 0.5\ N_a$ More than half of the parts are likely to be affected by design changes during the product life (4).					
			Company investment $R_i = S_h Q_e / W_a$ (5)									
			$R_i \geq 5$	$5 > R_i > 2$	$2 \geq R_i \geq 1$	$R_i < 1$	$R_i \geq 5$	$5 > R_i > 2$	$2 \geq R_i \geq 1$	$R_i < 1$		
$V_s > 0.65$ Annual production volume per shift greater than 0.65 million assemblies.	$N_a \geq 16$ 16 or more parts in the assembly.	0	AF	AF	AF	MM (AF)	AP	AP	AP (MM)	MM	MA (AP)	MA
	$15 \geq N_a \geq 7$ Between 7 and 15 parts in the assembly.	1	AF	AF (AI)	AI (AF)	MM (AI)	AP	AP	MM (AP)	MM	MA	MA
	$N_a \leq 6$ 6 or fewer parts in the assembly.	2	AI	AI	AI	AI	AI	AI (AP)	MM	MM	MA	MA
$0.65 \geq V_s > 0.4$ Annual production volume per shift between 0.4 and 0.65 million assemblies.	$N_a \geq 16$ 16 or more parts in the assembly.	3	AP	AP	MM (AP)	MM	AP	AP	AP	MA (MM)	MA	MA
	$15 \geq N_a \geq 7$ Between 7 and 15 parts in the assembly.	4	AI	AI	AI	MM	AP	AP	MM (AP)	MA (MM)	MA	MA
	$N_a \leq 6$ 6 or fewer parts in the assembly.	5	AI	AI	MM (AI)	MM	AI (MM)	MM	MM	MA (MM)	MA	MA
$0.4 \geq V_s > 0.2$ Annual production volume per shift between 0.2 and 0.4 million assemblies.	$N_a \geq 16$ 16 or more parts in the assembly.	6	AP	AP	MM	MM	AP	AP	AP	MA	MA	MA
	$15 \geq N_a \geq 7$ Between 7 and 15 parts in the assembly.	7	AI (MM)	MM	MM	MM	AP	MM	MA (MM)	MA	MA	MA
	$N_a \leq 6$ 6 or fewer parts in the assembly.	8	MM	MM	MM	MM	MM	MM	MA (MM)	MA	MA	MA
$V_s \leq 0.2$ Annual production volume per shift less than or equal to 0.2 million assemblies.		9	MM	MM	MM (MA)	MA	MM	MA	MA	MA	MA	MA

How assembly processes differ

Early in the design of any product it is important to decide which type of assembly process is likely to yield the lowest cost. This decision has a major bearing on the design because manual assembly differs widely from automatic assembly. Each type of process has its own advantages and limitations. For analytical purposes, the six basic assembly processes are:

AI: Automatic assembly using special-purpose indexing machines, workheads, and automatic feeders. One supervisor for the machine when $N_a < 6$ (rotary indexing machine) and one supervisor together with one assembly operator when $N_a > 6$ (in-line indexing machine).

AF: Automatic assembly using special-purpose free-transfer machines, workheads, and automatic feeders. One supervisor and one assembly operator for the machine.

AP: Automatic assembly using manually loaded part magazines and a free-transfer machine with programmable workheads capable of performing several assembly tasks. One supervisor and one assembly operator for the machine.

AR: Automatic assembly using manually loaded part magazines and a sophisticated two-arm robot with a special-purpose gripper that can handle all the parts for one assembly. One supervisor needed for the robot.

MA: Manual assembly on a multistation assembly line. The transfer device is a free-transfer machine with one buffer space between each operator.

MM: Manual assembly with mechanical assistance. This system is the same as MA, but feeders or other devices are provided and the assembly time per part thereby reduced.

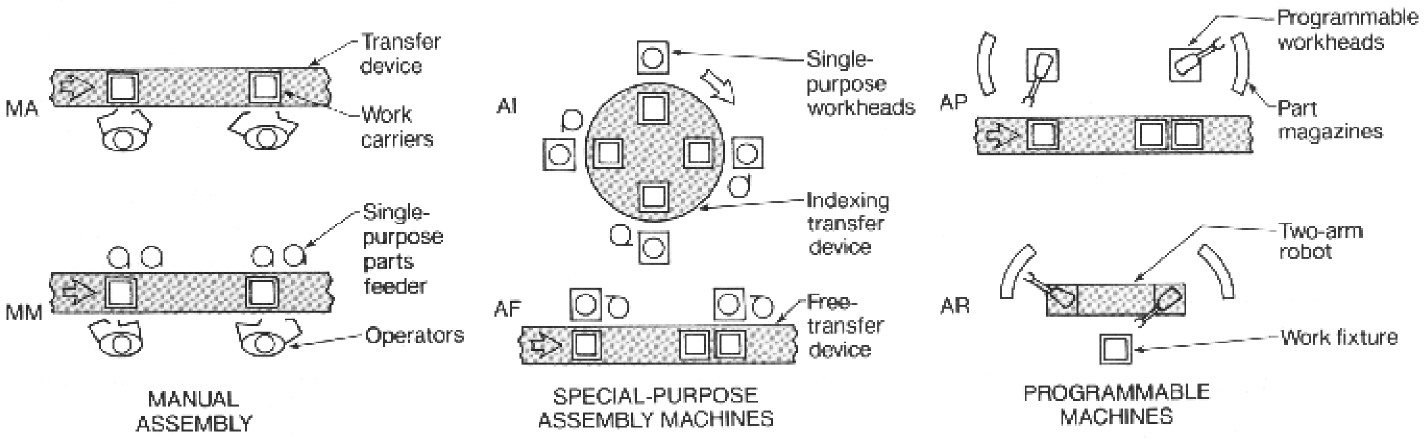

through 7. A shorter market life, parts of poor quality, or manual fitting would have suggested Columns 8 or 9.

The total number of parts required to build the different styles is 45, which is less than 1.5 times the number of parts in one assembly. Also, fewer than half of the parts will be subject to major redesign during the life of the product, because only ten redesigns are expected. These factors restrict the choice to Columns 0 through 3.

To select among these columns, calculate the investment factor R_i:

$$R_i = \frac{S_h Q_r}{W_a} = \frac{2(40,000)}{20,000} = 4$$

Therefore Column 1 is selected. The box at the intersection of Column 1 and Row 3 is labeled AP, for automatic assembly with programmable workheads.

If the production volume were higher, moving the selected box to Row 0 Column 1, special-purpose automatic assembly machines could be used. Such machines could also be used if the product could be broken down into smaller assemblies, shifting the selected box to Row 4 Column 1.

If the company's investment policy were not so generous, moving the selected box to Row 3 Column 2, then manual assembly with mechanical assistance would be the most appropriate method.

For the conditions specified, Row 3 Column 1 indicates that relatively low assembly cost can be achieved with automation, and that design for ease of automation should be pursued.

Succeeding articles will cover design for manual assembly, design for automatic assembly, and current developments in software that aids these design procedures in much the same way that "Work Factor" and "MTM" programs now assist production engineers.

Nomenclature

N_a — Number of parts in the completed assembly
N_d — Number of design changes during the first three years that would necessitate a new feeder or workhead on an automatic assembly machine
N_p — Number of different products to be assembled using the same basic assembly system during the first three years
N_t — Total number of parts required for building different product styles
Q_e = Capital expenditure allowance to replace one operator on one shift
R_i = Investment factor
S_h = Number of shifts
V_s — Annual production volume per shift
W_a — Annual cost of one assembly operator

DESIGN FOR ASSEMBLY: MANUAL ASSEMBLY

A a technique that quantifies the difficulties of manual assembly can cut production cost dramatically. The analysis spotlights not only parts that require excessive time for assembly, but also those that can be eliminated or combined with other parts.

GEOFFREY BOOTHROYD
Professor

PETER DEWHURST
Professor
University of Massachusetts
Amherst, MA

INDUSTRIAL productivity depends in large part on ease of assembly. In fact, the way a product is assembled is usually the single most important control over both manufacturing cost and labor requirements. Minimum production cost for a product is achieved when the most economical assembly process is selected early in the design stage, and the product is then designed for that process.

Contrary to the conventional wisdom, final product designs are not needed to make a reasonable selection of the most economical assembly process. Selection is based on projected market life, number of parts, projected production volume, and company investment policy.

Products with half the parts

Manual assembly requires workers to select parts, orient them, insert them, and often to fasten them with other parts that must also be selected, oriented, and inserted. Many of these time-consuming steps can be eliminated if preliminary designs are examined with an eye both to the assembly requirements they impose and also to the potential for combining parts with each other and with integral fasteners.

Substantial reductions in parts count and assembly time are possible, even when the original design has already been subjected to value analysis. Traditional value analysis tends to overlook small parts such as fasteners. Each fastener has a relatively small initial price, yet the assembly of such seemingly insignificant parts often adds substantially to the total cost of the product.

One example is the ribbon base plate from a Diablo printer. The "Old Design" shown here had already undergone value analysis, yet when the assembly was redesigned for ease of manual assembly the number of parts was cut from 77 to 36 and the cost was reduced by $4.90.

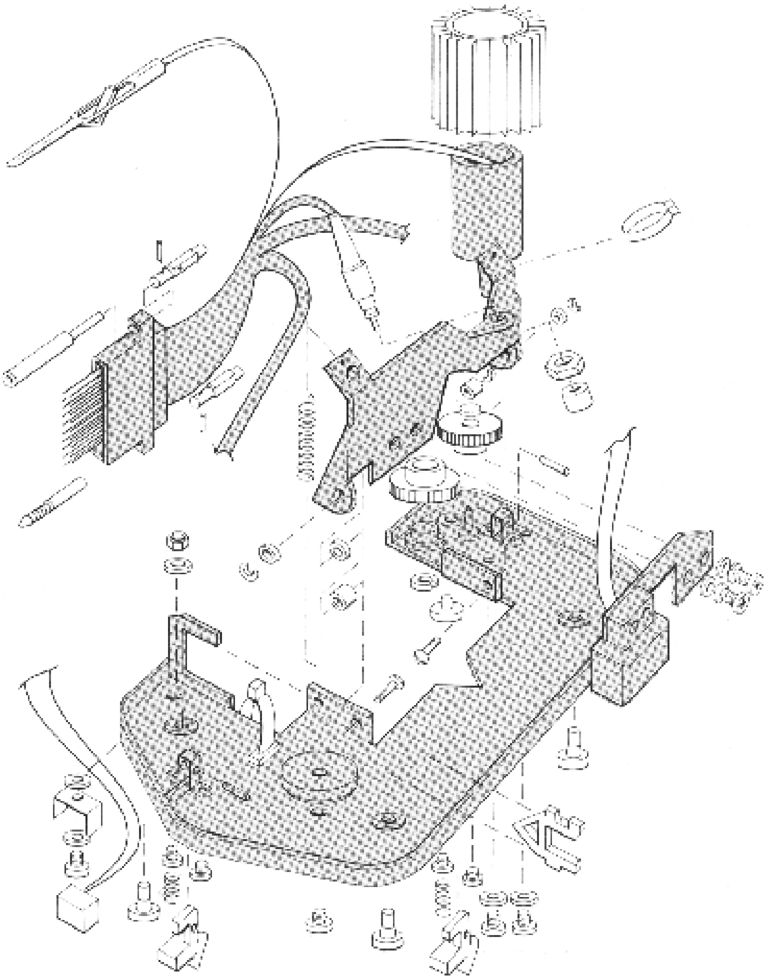

Old design — 77 parts

A detailed procedure for selecting the least costly assembly process was presented in "Design for Assembly: Selecting the Right Method," MD, Nov. 10, 1983, p. 94. The present article assumes that manual assembly has been selected and shows how to analyze designs for ease of manual assembly. Succeeding articles will deal with automatic assembly and software systems that assist in analysis and redesign.

Once it has been decided that a product is to be assembled manually, features of the design are examined systematically, and a "design efficiency" is calculated. This efficiency allows different designs to be compared for ease of assembly.

Examination of the preliminary design answers two important questions for each part in the assembly: Can this part be eliminated or combined with other parts in the assembly? And how long will it take a worker to grasp, manipulate, and insert this part?

With this information it is possible to estimate the total assembly time, compare it to the assembly time for an ideal design, and identify design features that result in high assembly cost.

Design analysis

The first step in the analysis is to obtain the best information available on the product. Useful items are engineering drawings, exploded three-dimensional views, an existing version, or a prototype.

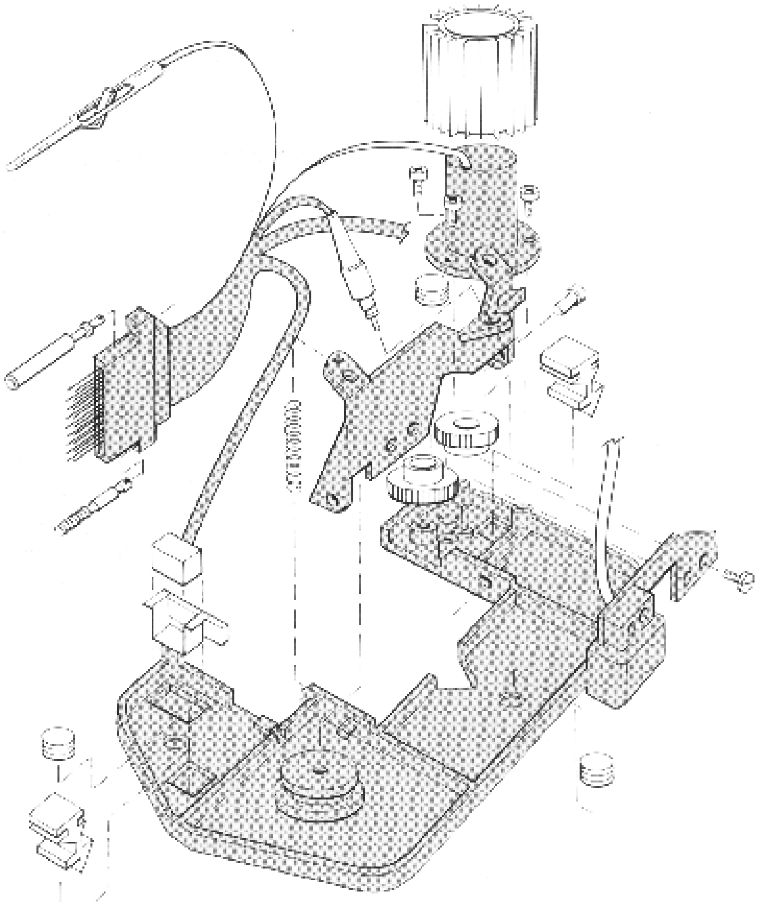

New design — 36 parts

The second step is to take the assembly apart, or imagine how it might be done. The complete assembly is assigned identification number 1. As each part is removed from the assembly, it is assigned an identification number in sequence. If the assembly contains subassemblies, they should be treated as "parts" at first, then analyzed separately later.

The third step is to reassemble the product. First assemble the part with the highest identification number to the work fixture, then add the remaining parts one by one. As the product is reassembled, data on handling, assembly, and operation cost are entered on a worksheet. Also entered is an estimate of the potential for eliminating the part or combining it with another part.

When reassembly is complete, data from the work sheet are summed to give the total estimated manual-assembly time and cost, as well as the theoretical minimum number of parts in the product.

Finally, the manual-assembly design efficiency is obtained from

$$E_m = 3N_m/T_m$$

where E_m = design efficiency; N_m = minimum number of parts, and T_m = total assembly time.

This equation compares the estimated assembly time for an assembly containing the theoretical minimum number of parts, each of which can be assembled in the "ideal" time of 3 s. This ideal time is based on the assumption that each part is easy to handle and insert, and that about one third of the parts are secured immediately on insertion with well-designed snap-fit fasteners.

Unfortunately, there is no broadly applicable guideline for a satisfactory design efficiency.

The assumption that all parts in the assembly are easy to handle and insert is impossible to meet in many products.

At one extreme, complex electromechanical products that require extensive wiring and gasketing tend to have low design efficiencies, even when well designed. Many companies making such products have decided that design efficiencies around 20 to 30% are quite acceptable.

At the other extreme, simple products such as pneumatic piston assemblies with few parts can have design efficiencies as high as 90%. Ultimately, experience with a range of similar products is the only way to decide on an acceptable efficiency.

Generating data

The most critical step in the design analysis is the reassembly, where data are generated for possible redesign. The easiest way to understand this process is to consider the example of a riser-panel assembly.

For purposes of reassembly and data generation, never assume that one part is grasped in

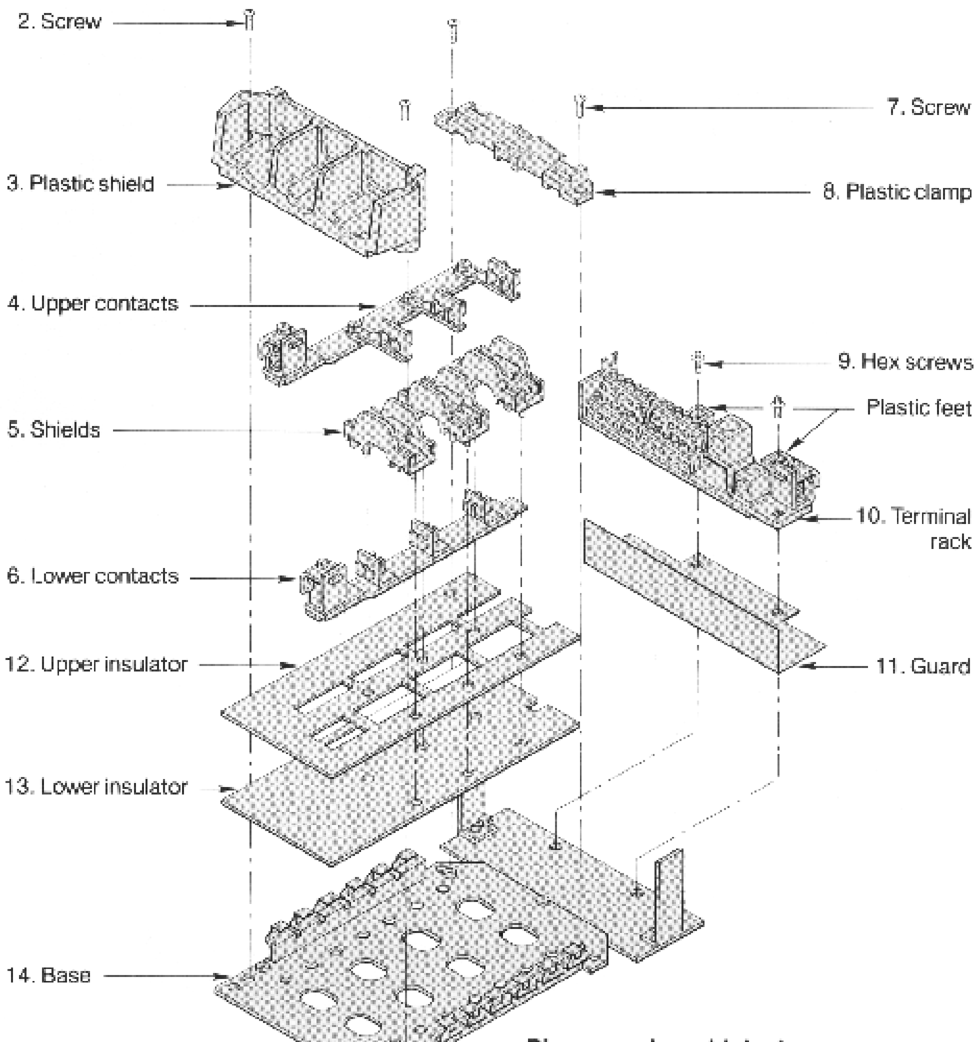

Riser panel — old design

Manual handling times

Parts can be grasped and manipulated by one hand without the aid of grasping tools		Parts are easy to grasp and manipulate					Parts present handling difficulties				
		Thickness > 2 mm			Thickness ≤ 2 mm		Thickness > 2 mm			Thickness ≤ 2 mm	
		Size > 15 mm	6 mm ≤ Size ≤ 15 mm	Size < 6 mm	Size > 6 mm	Size ≤ 6 mm	Size > 15 mm	6 mm ≤ Size ≤ 15 mm	Size < 6 mm	Size > 6 mm	Size ≤ 6 mm
		0	1	2	3	4	5	6	7	8	9
$(\alpha + \beta) < 360°$	0	1.13	1.43	1.88	1.69	2.18	1.84	2.17	2.65	2.45	2.98
$360° \leq (\alpha + \beta) < 540°$	1	1.5	1.8	2.25	2.06	2.55	2.25	2.57	3.06	3	3.38
$540° \leq (\alpha + \beta) < 720°$	2	1.8	2.1	2.55	2.36	2.85	2.57	2.9	3.38	3.18	3.7
$(\alpha + \beta) = 720°$	3	1.95	2.25	2.7	2.51	3	2.73	3.06	3.55	3.34	4

▨ ONE HAND ASSEMBLY

Charts in the Design for Assembly Handbook *give standard handling codes and times. α and β are the required rotations for end-to-end and side-to-side symmetry. "Size" is the largest orthogonal dimension of the part.*

Design for manual assembly worksheet

1	2	3	4	5	6	7	8	9	Name of assembly
Part I.D. no.	Number of times the operation is carried out consecutively	Two-digit manual handling code	Manual handling time per part	Two-digit manual insertion code	Manual insertion time per part	Operation time, sec (2) x [(4) + (6)]	Operation cost, ¢ 0.4 x (7)	Figures for estimation of theoretical minimum parts	Riser panel (old design)
14	1	30	1.95	00	1.5	3.45	1.38	1	Base
13	1	33	2.51	00	1.5	4.01	1.60	1	Lower insulator (< 2 mm)
12	1	33	2.51	06	5.5	8.01	3.20	0	Upper insulator (< 2 mm)
11	1	30	1.95	08	6.5	8.45	3.38	0	Guard
10	1	30	1.95	08	6.5	8.45	3.38	1	Terminal rack
9	2	10	1.50	49	10.5	24.00	9.60	0	Hex. screws (8 x 16 mm)
8	1	30	1.95	00	1.5	3.45	1.38	0	Plastic clamp
7	2	11	1.80	49	10.5	24.60	9.84	0	Screw (9 x 14 mm)
6	1	30	1.95	08	6.5	8.45	3.38	1	Lower contacts
5	3	20	1.80	00	1.5	9.90	3.96	0	Shields
4	1	30	1.95	02	2.5	4.45	1.78	1	Upper contacts
3	1	30	1.95	02	2.5	4.45	1.78	1	Plastic shield
2	2	11	1.80	49	10.5	24.60	9.84	0	Screw (9 x 14 mm)
						136.3	54.5	6	Design efficiency = $\frac{3 N_m}{T_m}$ 0.13
						T_m	C_m	N_m	

The old design of the riser panel required 18 parts and 136.3 s for assembly. Analysis shows that the number of parts can theoretically be reduced to six (Column 9 on the worksheet). High assembly times in Column 7 indicate opportunities for improved design.

Manual insertion times

			After assembly no holding down required to maintain orientation and location.				Holding down required during subsequent processes to maintain orientation or location.			
			Easy to align and position during assembly.		Not easy to align or position during assembly.		Easy to align and position during assembly.		Not easy to align or position during assembly.	
			No resistance to insertion.	Resistance to insertion.	No resistance to insertion.	Resistance to insertion.	No resistance to insertion.	Resistance to insertion.	No resistance to insertion.	Resistance to insertion.
			0	1	2	3	6	7	8	9
Addition of any part where neither the part itself nor any other part is finally secured immediately.	Part and associated tool (including hands) can easily reach the desired location.	0	1.5	2.5	2.5	3.5	5.5	6.5	6.5	7.5
	Part and associated tool (including hands) cannot easily reach the desired location. Due to obstructed access or restricted vision.	1	4	5	5	6	8	9	9	10
	Part and associated tool (including hands) cannot easily reach the desired location. Due to obstructed access and restricted vision.	2	5.5	6.5	6.5	7.5	9.5	10.5	10.5	11.5

▨ Part added but not secured

Manual insertion times depend on ease of handling parts and tools, need for holding parts down after insertion, and ease of alignment, positioning, and insertion.

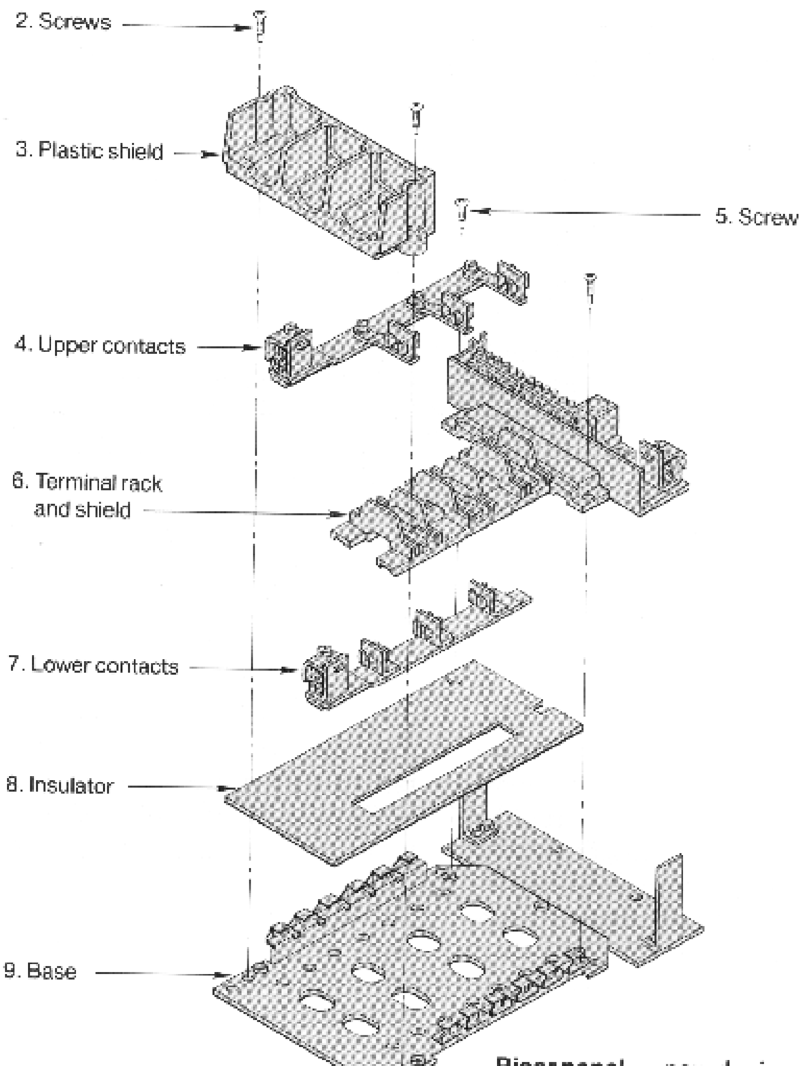

Riser panel — new design

each hand and joined, and then placed in the assembly. One row on the worksheet must be completed for each part as it is added in turn to the assembly.

Reassembly is started with the part having the highest identification number, 14 for the old design of the riser panel. The base is inserted in the fixture, and the identification number entered in Column 1 of the worksheet. The operation is carried out once, so "1" is entered in Column 2.

A two-digit handling process code is found on a chart, which also shows an estimated time for manual handling. The process code is entered in Column 3 of the worksheet and the corresponding handling time in Column 4.

The assembly code and insertion time are found from a second chart. The assembly code is entered in Column 5 and insertion time in Column 6. The total operation time in secoonds is calculated by adding the times in Columns 4 and 6 and multi-

The new design of the riser panel has only 10 parts compared to 18 in the old design, reducing assembly time by 84.6 s. Further reductions would be possible if the screws (Parts 5 and 2) could be replaced with integral fasteners.

Design for manual assembly worksheet

1	2	3	4	5	6	7	8	9	Name of assembly
Part I.D. no.	Number of times the operation is carried out consecutively	Two-digit manual handling code	Manual handling time per part	Two-digit manual insertion code	Manual insertion time per part	Operation time, sec (2) x [(4) + (6)]	Operation cost, ¢ 0.4 x (7)	Figures for estimation of theoretical minimum parts	Riser panel (new design)
9	1	30	1.95	00	1.5	3.45	1.38	1	Base
8	1	30	1.95	00	1.5	3.45	1.38	1	Insulator (> 2 mm)
7	1	30	1.95	00	1.5	3.45	1.38	1	Lower contacts
6	1	30	1.95	00	1.5	3.45	1.38	1	Terminal rack and shield
5	2	10	1.5	38	6.0	15.00	6.00	0	Screw (9 x 20 mm)
4	1	30	1.95	02	2.5	4.45	1.78	1	Upper contacts
3	1	30	1.95	00	1.5	3.45	1.38	1	Plastic shield
2	2	10	1.5	38	6.0	15.00	6.00	0	Screw (9 x 20 mm)
						51.7 T_m	20.68 C_m	6 N_m	Design efficiency = $\frac{3N_m}{T_m}$ 0.35

plying by the number of repeat operations in Column 2. This result is entered in Column 7.

Total operation cost in cents is obtained by multiplying the operation time in Column 7 by 0.4 and entering the result in Column 8. The value of 0.4 ¢/s is reasonably representative for many companies, and if designs from different companies are to be compared it is useful to use such a standard value. However, a more accurate value for a given company can be used in place of 0.4.

Probably the most critical entry on the worksheet is the theoretical minimum number of parts, entered in Column 9. Three criteria determine this number:

1. Must this part be separate because it moves with respect to all other parts already assembled? (Sometimes parts can be combined by manufacturing them from flexible material, so that limited relative motion is possible.)

2. Must this part be made of a different material than or be isolated from all other parts already assembled? (Only fundamental reasons concerned with material properties may be considered here.)

3. Must this part be separate from all other parts already assembled because necessary assembly or disassembly would otherwise be impossible? (Fasteners are rarely counted as essentially separate parts because integral fasteners can be employed, at least in theory.)

If the answer to any of these questions is yes, a "1" is placed in Column 9 unless multiple identical operations are indicated in Column 2. In that case, the number of parts that must be separate is placed in Column 9.

In the riser panel, the base (Part 14) must be separate because it is the first part in the assembly. The lower insulator (Part 13) must be separate because it insulates the metal base from the metal contacts, satisfying the second criterion.

The upper insulator (Part 12), guard (Part 11), plastic feet on the terminal rack (Part 10), three shields (Part 5), and the plastic clamp (Part 8) do not move and need not be made of a different material than the lower insulator (Part 13). Hence a "0" has been placed in Column 9 of the worksheet for all these parts.

The lower contacts (Part 6) and the upper contacts (Part 4) must be separate for isolation purposes, and the plastic shield (Part 3) must be separate for reasons of assembly. Finally, the screws need not be separate; integral fasteners could be employed.

Redesign

The design analysis and the data it generates provide useful design information in two areas. First, the criteria for separate parts point out where the number of parts can be reduced. In many instances parts cannot be eliminated because of other constraints, such as the economics of manufacture or unavailability of specialized equipment needed to manufacture the combined parts. However, the areas for possible improvement are clearly spelled out in Column 9 of the worksheet.

Second, the areas for improvement of handling and assembly can be seen by reviewing the figures in Columns 4 and 6. Any operations resulting in excessive times should be examined critically.

In the riser panel, the theoretical minimum number of parts is six and the actual number in the old design is 18. Column 9 of the worksheet indicated that all the plastic parts except the plastic shield (Part 3) could theoretically be manufactured as one component, integral with the plastic feet on the terminal rack. However, the lower contacts must be sandwiched between the insulator and the three shields, so the insulator that results from combining Parts 12 and 13 must be separate for reasons of assembly. The three shields, the plastic feet on the terminal rack, the guard, and the plastic clamp can be combined. This combination also eliminates the need for the two hex screws (Part 9). Because integral fasteners are not feasible for this assembly, the number of parts can be reduced from the original 18 to 10.

The completed worksheet for the new design shows that the estimated manual assembly time is 51.7 s, less than half the original time of 136.3 s. The theoretical minimum number of parts is 6 in both old and new designs, so design efficiency is increased from 13 to 35% and estimated assembly cost is reduced from 54.5 to 20.7¢.

Because the analysis procedure must use standard times and costs to produce comparable data for different designs, the figures it produces do not necessarily reflect actual industrial experience. For example, the analysis assumes that parts are added to the assembly one at a time. This assumption is valid for assembly lines where workers add only one part at each station, but for bench assembly and on most assembly lines, workers often handle two parts simultaneously. This practice reduces overall assembly time by about one-third. Thus, a more accurate bench assembly time is obtained if the theoretical time is divided by 1.5. This procedure does not affect design efficiency because "ideal" assembly time is reduced in the same proportion.

The analysis also assumes that parts are presented in bulk and randomly oriented. However, some parts are available in magazines or special containers. If accurate estimates of assembly time are needed and appropriate data are available, they can be included in the analysis.

This article is largely based on the *Design for Assembly Handbook*, which has been developed by Boothroyd and Dewhurst at the University of Massachusetts. The handbook is available from Professor Boothroyd, Automatic Assembly Program, Department of Mechanical Engineering, Univ. of Mass., Amherst, MA 01003, (413) 545-0554.

DESIGN FOR ASSEMBLY: AUTOMATIC ASSEMBLY

Assembly cost depends crucially on product design, especially when a high-speed dedicated assembly system is to be used. The suitability of a product for automatic assembly and the cost of assembly can both be assessed by systematically classifying design features — even when details of the assembly process are not known.

PETER DEWHURST
Professor

GEOFFREY BOOTHROYD
Professor
University of Massachusetts
Amherst, MA

DESIGN of assemblies and the processes that assemble them presents a chicken-and-egg problem. The production process cannot be well defined until the assembly is designed, but the assembly cannot be well designed until the process is defined. The difference between an economical assembly process and a costly failure lies almost entirely in the hands of the product designer, not the process designer.

Production costs are minimized when design and production engineering are coordinated. That is, when the least costly production process is selected and the product is designed for that process. A method for finding the least costly process was detailed in "Design for Assembly: Selecting the Right Method," MD, Nov. 10, 1983, p. 94. A method of designing products for manual assembly was presented in "Design for Assembly: Manual Assembly," MD, Dec. 8, 1983, p. 140. A future article will cover software systems that aid in analysis and redesign.

When a product is to be assembled automatically, the design can be assessed for suitability even before the details of the assembly process are known. Design features can be classified and numerical ratings assigned to indicate areas where assembly can be made easier.

Suitability of a product for automatic assembly can be determined by an analysis that consists of three major steps for each component part in the assembly:

- Estimate the cost of handling the part automatically in bulk and delivering it in the correct orientation for insertion on an automatic-assembly machine.
- Estimate the cost of inserting the part automatically into the assembly and the cost of any extra operations.
- Decide whether the part must necessarily be separate from all other parts in the assembly.

These three pieces of information can be combined to estimate the total cost of assembly and to estimate the "design efficiency," which is a numerical rating for the ease of automatic assembly.

Handling cost

The most important and difficult consideration in automatic assembly is the efficiency with which individual parts can be handled automatically. Some parts are impossible to feed and orient automatically, even with expert redesign, and the assembly system must then include one or more manual workstations.

The handling efficiency of parts is presented in four charts in the *Design for Assembly Handbook*, and the chart for rectangular parts is reproduced in this article. The charts make it possible to estimate the relative cost of a parts feeder, C_r, and the efficiency with which the part can be oriented automatically, E_o.

With values for C_r and E_o, plus the basic cost of a standard feeding and orienting device, simple equations give the cost of automatic part handling. For example, if the cost of a basic feeder that can deliver parts at 1500 mm/min is $5,000, then the cost of feeding and orienting any part, C_f is

$$C_f = 0.03\,D_f \text{ ¢/part}$$

where

$$D_f = 60C_r/F_r \text{ if } F_r < F_m$$
$$D_f = 60C_r/F_m \text{ if } F_r > F_m$$
$$F_m = 1500E_o/Y$$

Insertion cost

The cost of using an automatic workhead for part insertion can be estimated from the Automatic Insertion Data Chart. This chart classifies insertion processes and gives relative workhead costs.

The basis for cost comparisons is the cost of a simple pick-and-place device that performs easy insertions from directly above

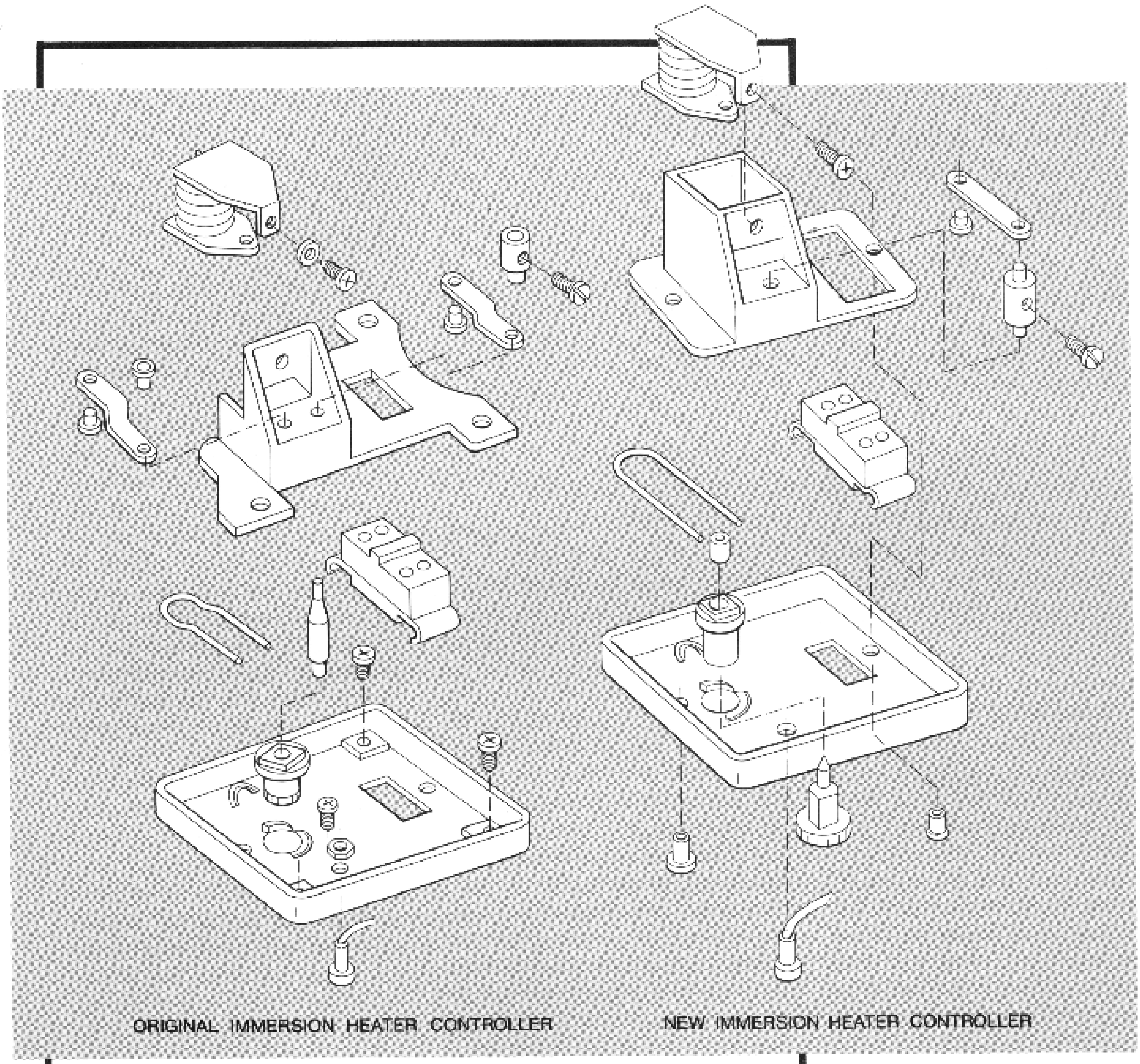

ORIGINAL IMMERSION HEATER CONTROLLER

NEW IMMERSION HEATER CONTROLLER

From manual to automatic assembly

When executives at Satchwell Sunvic Ltd. wanted to cut costs by automating production of an immersion heater controller, they consulted experts at the University of Salford Industrial Center. Initial analysis showed that of the 21 component parts in the original controller, 14 were unsuitable for automatic assembly. As a result, automation was uneconomical.

The controller was then redesigned and simplified, using information from the analysis. The new controller had 16 parts, of which only six were unsuited to automatic assembly. Now it was possible to automate the process, even though some manual assembly remained.

Such solutions are not uncommon in automatic assembly systems. One or more parts of an assembly are often impossible to handle automatically, so the assembly machine includes manual workstations. For the immersion heater controller, the mixed automatic and manual assembly system saved about $150,000 per year in assembly costs.

1	2	3	4	
Part I.D. No.	Number of times operation is carried out simultaneously	Automatic handling code	Orienting efficiency, E_o	
5	1	214	0.45	
4	1	000	0.70	
3	1	100	0.70	
2	1	645	0.10	

the assembly at a maximum rate of 60 parts/min. If such a workhead, installed and operating on an assembly machine costs $10,000, then the cost of automatically inserting a part is

$$C_i = 0.06D_i \text{ ¢/part}$$

where

$$D_i = 60W_c/F_r \text{ if } F_r < 60$$
$$D_i = W_c \quad \text{if } F_r > 60$$

Minimum parts

Assembly costs usually increase in proportion to the number of parts in the product. Therefore, no part should escape scrutiny, no matter how low its intrinsic value. Such parts as fasteners, clips, and washers may seem insignificant in themselves, but they add enormously to assembly cost. Taken as a group, they often account for the majority of assembly cost.

The cost influence of small parts is particularly evident in automatic assembly, because each part in the product requires a feeding and orienting device, a workhead, at least one extra work carrier, a transfer device, and an increase in the size of the basic machine structure.

It is not unusual for the elimination of a single fastener to save $20,000 or more in the cost of an assembly machine. Moreover, because the resulting machine has fewer work stations, it generally operates more efficiently.

For these reasons, estimating the theoretical minimum number of parts is a particularly important step in the analysis. For a part to be judged essential, it must satisfy one of three criteria:

1. Does the part move with respect to all other parts already assembled?

2. Must the part be made of a different material or be isolated from all other parts already assembled? (Only fundamental reasons concerned with material properties may be considered here.)

3. Must the part be separate from all other parts already assembled because necessary assembly or disassembly would otherwise be impossible?

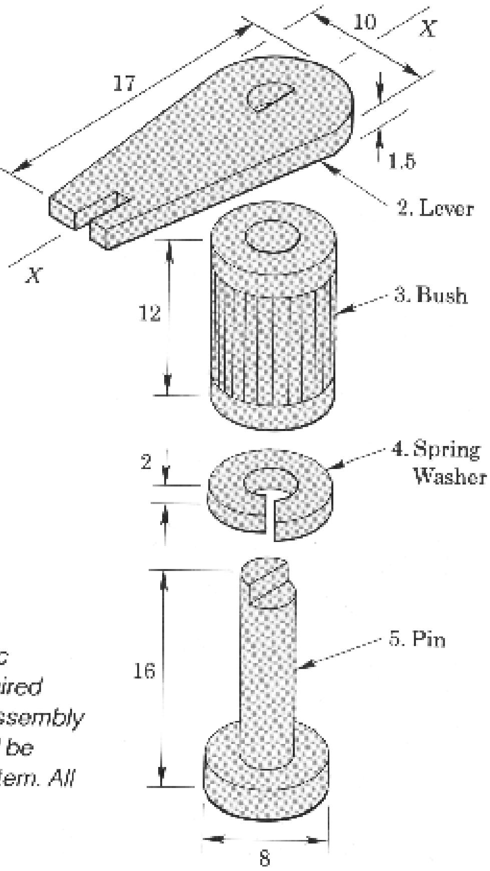

The design efficiency of this lever assembly is only 33% with automatic assembly. However, much of that low percentage stems from the required assembly rate of only 30/min. With that assembly rate, an ideal lever assembly would have an efficiency of only 50%. Efficiency of the assembly could be raised to 43% if the lever were press fit on the stem. All dimensions are in mm.

5	6	7	8	9	10	11	12	13	14	required rate of assembly Fr (per minute)	
Relative feeder cost, $C_r = F_c + D_c$	Maximum basic feed rate, F_m	Difficulty rating for automatic handling, D_f	Cost of automatic handling per part, $C_f = 0.03D_f$	Automatic insertion code	Relative workhead cost, W_c	Difficulty rating for automatic insertion, D_i	Cost of automatic insertion per part, $C_i = 0.06D_i$	Operation cost, cents (2) x [(8) + (12)]	Figures for estimation of theoretical minimum parts	Name of assembly Adjusting Lever	
1	48.2	2	0.06	00	1	2	0.12	0.18	1	Pin	
1	150	2	0.06	00	1	2	0.12	0.18	1	Spring washer	
1	105	2	0.06	00	1	2	0.12	0.18	1	Bush	
1.5	8.82	10.2	0.31	00	1	2	0.12	0.43	1	Lever	
				91	0.9	1.8	0.11	0.11		Separate operation (rivet pin head)	
								1.08	4	Design efficiency $= \frac{0.09N_m}{C_a} =$	0.33
								C_a	N_m		

Automatic Handling — Data for non-rotational parts (first digit 6, 7 or 8)

First digit	E_o	C_r
6	0.7	1
7	0.45	1.5
8	0.3	2

		$A > 1.1B$ and $B > 1.1C$	$A \leq 1.1B$ or $B \leq 1.1C$ (Code the main feature or features which distinguish the adjacent surfaces having similar dimensions.)							
			Steps or chamfers parallel to —			Through grooves parallel to —			Holes or recesses $> 0.1B$ (cannot be seen in silhouette.)	Other — including slight asymmetry, features too small etc.
			X axis and $> 0.1C$	Y axis and $> 0.1C$	Z axis and $> 0.1B$	X axis and $> 0.1C$	Y axis and $> 0.1C$	Z axis and $> 0.1B$		
		0	1	2	3	4	5	6	7	8
Part has 180° symmetry about all three axes	0	0.8 1 0.9 1 0.6 1	0.8 1 0.9 1 0.5 1	0.2 1 0.5 2 0.15 2	0.5 1 0.5 1.5 0.15 1.5	0.75 1 0.5 1 0.5 1	0.25 1 0.5 1.5 0.15 1	0.5 1.5 0.6 1 0.15 1.5	0.25 2 0.5 1 0.15 2	MANUAL HANDLING REQUIRED

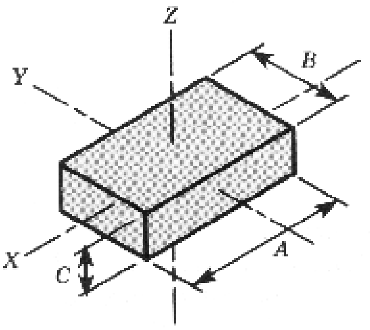

			Code the main feature, or if orientation is defined by more than one feature, then code the feature that gives the largest third digit							
			Steps or chamfers parallel to —			Through grooves parallel to —			Holes or recesses $> 0.1B$ (cannot be seen in silhouette.)	Other — including slight asymmetry, features too small etc.
			X axis and $> 0.1C$	Y axis and $> 0.1C$	Z axis and $> 0.1B$	X axis and $> 0.1C$	Y axis and $> 0.1C$	Z axis and $> 0.1B$		
			0	1	2	3	4	5	6	7
Part has 180° symmetry about one axis only.	About X axis	1	0.4 1 0.5 1 0.4 1	0.6 1 0.15 1 0.6 1	0.4 1.5 0.25 2 0.4 2	0.4 1 0.5 1 0.2 1	0.3 1 0.25 1 0.3 1	0.7 1 0.25 1.5 0.15 1	0.4 2 0.25 3 0.1 2	MANUAL HANDLING REQUIRED
	About Y axis	2	0.4 1 0.4 1 0.5 1	0.3 1 0.2 1 0.15 1	0.4 1.5 0.25 2 0.5 2	0.5 1 0.4 1 0.2 1	0.3 1 0.25 1 0.15 1	0.4 1 0.25 1 0.15 2	0.4 2 0.25 2 0.15 2	
	About Z axis	3	0.4 1 0.3 1 0.4 1	0.3 1 0.2 1 0.2 1	0.4 1.5 0.25 2 0.4 2	0.4 1 0.3 1 0.2 1	0.3 1 0.25 1 0.15 1	0.4 1.5 0.25 2 0.15 2	0.4 2 0.25 2 0.15 2	
Part has no symmetry (code the main feature(s) that define the orientation.)	Orientation defined by one main feature	4	0.25 1 0.25 1 0.15 1	0.15 1 0.1 1.5 0.14 1	0.15 1.5 0.24 2 0.15 1	0.1 1 0.2 1 0.1 1	0.15 1 0.1 1.5 0.05 1	0.1 1.5 0.15 2 0.1 1.5	0.1 2 0.15 3 0.08 2	
	Orientation defined by two main features and one is a step, chamfer or groove	6	0.2 2 0.1 3 0.05 2	0.15 2 0.1 3.5 0.05 2	0.1 2.5 0.1 4 0.05 2.5	0.1 2 0.1 3 0.05 2	0.15 2 0.1 3.5 0.05 2	0.1 2.5 0.1 4 0.05 2.5	0.1 3 0.1 5 0.05 3	
	Other — including slight asymmetry etc.	9	MANUAL HANDLING REQUIRED							

Automatic insertion — relative workhead cost

Key: ▨ Part added but not secured

				After assembly no holding down required to maintain orientation and location.				Holding down required during subsequent process(es) to maintain orientation and location.			
				Easy to align and position		Not easy to align or position (no features provided for the purpose)		Easy to align and position		Not easy to align or position (no features provided for the purpose)	
				No resistance to insertion	Resistance to insertion	No resistance to insertion	Resistance to insertion	No resistance to insertion	Resistance to insertion	No resistance to insertion	Resistance to insertion
				0	1	2	3	6	7	8	9
Addition of any part where no final securing is taking place	Straight line insertion	From vertically above	0	1	1.5	1.5	2.3	1.3	2	2	3
		Not from vertically above	1	1.2	1.6	1.6	2.5	1.6	2.1	2.1	3.3
	Insertion not straight line motion		2	2	3	3	4.6	2.7	4	4	6.1

When these criteria have been applied to all parts. the sum of the essential parts is the theoretical minimum number for the assembly. The criteria should be applied without regard to the apparent feasibility of eliminating parts or combining them with others. Feasibility and practicality are matters to be addressed by the designer after the analysis. The analysis itself indicates the possible directions for simplification and the cost benefits that result.

Generating data

These principles are carried out in practice with the aid of the Automatic Assembly Worksheet. To illustrate the procedure, consider an adjusting-lever assembly.

The first step is to obtain the best information about the assembly. Here, an exploded three-dimensional view is used, but useful information might also be found in engineering drawings, existing versions, or prototypes.

The second step is to take the assembly apart, or imagine how it might be done. Assign an identification number to each item; the complete assembly is numbered 1, and individual parts are numbered in the order of disassembly.

Next, begin to reassemble the product, starting with the part with the highest identification number. Complete one row of the worksheet for each part as it is added to the assembly, or for each separate assembly operation. One row of the completed worksheet for the lever assembly serves as an example.

Enter the identification number of the part in Column 1. For the lever, this number is 2.

The lever is only added once, so enter a 1 in Column 2.

The part feeding and orienting code is entered in Column 3. The lever is basically a flat rectangular (nonrotational) piece, with its length less than three times its width and more than four times its thickness, so the first digit of the code is 6. The second and third digits come from the Automatic Handling Chart. The lever is not symmetrical about any of its axes, so the second digit must be 4, 6, or 9. Its proper orientation is defined by the semicircular hole, so the second digit is 4. The through groove is parallel to the Z axis and is longer than 0.1 times the width, so the third digit is 5.

Code 645 indicates that the orientation efficiency $E_o = 0.1$ and that the relative cost of a parts feeder $C_r = 1.5$. These values are entered in Columns 4 and 5 of the worksheet.

The lever is 17 mm long, and the standard operating rate for parts feeders is 1500 mm/min, and $E_o = 0.1$, so a standard feeder delivers 8.8 parts/min. Therefore, 8.8 is the value of F_m, and is entered in Column 6.

The required assembly rate $F_r = 30$ parts/min, so the difficulty rating for automatic handling is given by

$$D_f = 60C_r/F_m = 60(1.5)/8.8 = 10.2$$

This value is entered in Column 7.

The cost of feeding and orienting each part is entered in Column 8. For the lever,

$$C_f = 0.03D_f = 0.03(10.2) = 0.31¢$$

The lever is inserted onto the pin, which has enough clearance to allow easy alignment and positioning from directly above the pin. The appropriate two-digit code from the Automatic In-

Redesigning the lever assembly

Design efficiency for automatic assembly depends both on the features of the design and the required assembly rate. Assembly takes place using equipment that typically operates at speeds up to one cycle per second. Thus, if the required assembly rate is only 30 per minute, as it is for the lever assembly, then even an ideal design has an efficiency of only 50%.

The lever assembly has a design efficiency of 33%, so it is already fairly good. However, it is not ideal for two reasons. First, the assembly involves a separate securing operation that requires an extra workstation on the assembly machine. Second, Column 7 of the worksheet shows that the lever is difficult to feed and orient automatically.

The Automatic Handling Data Chart shows that the lever would be easier to handle if it were symmetrical about its *X* axis. In the existing design the lever is asymmetrical because of the offset slot and the semicircular hole, neither of which is essential to the product. A redesigned lever with a centralized slot and circular hole would have an automatic handling code of 615, with an orienting efficiency $E_o = 0.7$ and a relative feeder cost $C_r = 1$. The estimated cost of automatic handling would then be 0.06¢ per lever instead of 0.31¢ per lever for the original design.

If the lever were also designed to be press fit onto the pin, the estimated total assembly cost would become 0.83¢, a 23% reduction from the original assembly cost. The efficiency rating for this new design would be 43%, quite close to 50%.

sertion Data Chart is thus 00. This number is entered in Column 9.

The relative workhead cost from the Automatic Insertion Data Chart is $W_c = 1$, which is entered in Column 10.

The difficulty rating for automatic insertion is entered in Column 11. For the lever,

$$\begin{aligned} D_i &= 60W_c/F_r \\ &= 60(1)/30 = 2 \end{aligned}$$

The cost of insertion is entered in Column 12. For the lever,

$$\begin{aligned} C_i &= 0.06D_i = 0.06(2) \\ &= 0.12\,¢ \end{aligned}$$

The total cost of feeding, orienting, and inserting the lever is the sum of the separate costs per part for these operations. In other words, it is the sum of Columns 8 and 12, multiplied by Column 2. For the lever this amounts to 0.43¢, which is entered in Column 13.

If the part must be separate according to the three criteria for the minimum number of parts, a 1 is entered in Column 14. Otherwise, a 0 is entered. The lever must be separate from the pin to allow the bush and spring washer to be assembled, so Criterion 3 is satisfied, and the lever must be a separate part.

When data for each part has been entered on the worksheet, the total cost of automatic handling and insertion can be found by adding the numbers in Column 13. The theoretical minimum number of parts is found by adding the numbers in Column 14. In this example, $C_a = 1.08$ and $N_m = 4$.

Design efficiency is calculated from the equation on the worksheet. For the adjusting-lever assembly, it is 33%.

Assessing data

The data generated in filling out the worksheets cover two main areas: potential for eliminating parts and potential for improving automatic handling and assembly. Areas where parts may be eliminated or combined with other parts are easy to locate from Column 14 of the worksheet. However, parts identified with a 0 in that column often cannot be eliminated because of other constraints. Manufacturing combined parts may be impossible with available equipment, or just too costly. However, a reduction in parts is usually the most effective way to reduce assembly cost.

The second major way to cut cost is to simplify the handling and assembly of the parts that remain. Start by checking Column 6 on the worksheet. If this maximum basic feed rate is less than the required feed rate, then check the feeding and orienting efficiency in Column 4. A low value for E_o indicates considerable scope for improvement.

The Automatic Handling Data Chart serves as a guide to the part features that create problems. Consider changes to the part that make the second and third digits of the feeding and handling code as close as possible to 00. The same charts can point out helpful changes if the relative feeder cost in Column 5 of the worksheet is greater than 1. Use the Automatic Insertion Chart as a guide to possible improvements in the insertion or fastening process if the relative workhead cost W_c is greater than 1. MD

Nomenclature

A = Longest orthogonal dimension of part, mm

B = Middle orthogonal dimension of part, mm.

C = Shortest orthogonal dimension of part, mm.

C_a = Cost of automatic assembly, ¢/assembly

C_i = Cost of automatically inserting a part, ¢/part

C_f = Cost of feeding and orienting a part, ¢/part

C_r = Relative cost of parts feeder

D_i = Relative difficulty of inserting a part

D_f = Relative of difficult of feeding a part

E_o = Efficiency of orienting a part automatically

F_m = Maximum basic feed rate, part/min

F_r = Required feed rate, parts/min

N_m = Theoretical minimum number of parts

W_c = Relative workhead cost

Y = Maximum dimension of the part, mm

This article is largely based on the *Design for Assembly Handbook*, which has been developed by Boothroyd and Dewhurst at the University of Massachusetts. The handbook is available from Professor Boothroyd, Automatic Assembly Program, Department of Mechanical Engineering, Univ. of Mass., Amherst, MA 01003, (413) 545-0054.

DESIGN FOR ASSEMBLY: ROBOTS

Robots can slash assembly costs. But as with any other assembly process, robot-based techniques must be taken into account at the design stage. The analysis procedure outlined here shows how the right design decisions can cut the cost of robotic assembly.

PETER DEWHURST
Professor

GEOFFREY BOOTHROYD
Professor
University of Massachusetts
Amherst, MA

Programs pare parts and cost

The chassis of a portable tape player was subjected to analysis by the design-for-assembly software system, which rapidly found 23 opportunities for redesign. This demonstration is significant because the developers believed they had already designed the chassis for ease of assembly.

In fact they had not done badly. All parts were easy to insert and could be assembled with straight-line motion from above. In addition, only five of the 40 parts in the chassis assembly were found to be candidates for elimination. For manual assembly, their original design achieved a relatively high efficiency of 30%.

However, an additional 18 parts were found to be candidates for redisign because they were expensive to feed and orient automatically. That held the design efficiency for automatic assembly down to 11%. In the present manufacturing system, these parts are hand-loaded into magazines, so the difficulty of feeding and orienting the parts automatically is avoided. The penalty, however, is sharply higher cost associated with manual handling.

Summary of economic analysis

		Automatic Assembly	Manual Assembly
Assembly efficiencies (%)		11	31
	Manual work stations	8	61
	Total work stations	43	61
Costs per assembly (¢)	Handling, ins'n etc.	29.66	91.58
	Basic machine	33.86	16.01
	Operator & supervisor	3.75	—
	Total	67.27	107.59
Total assembly time (s)			228.95

Number of different operations = 40
Total number of parts = 40
Theoretical minimum parts = 35
Required assembly rate (assem/min) = 16

Design for assembly analysis

Part number and name	Assembly method	Costs (measured in cents per part)			
		Handling	Insertion	Extra op.	Total
2	Auto	1.3	0.27	—	1.57
Play cover	Manual	0.78	1.2	—	1.98
Because this part would be expensive to feed and orient automatically, manual handling and insertion are assumed. This part is a candidate for redesign (part code 86600)					
3	Auto	0.17	0.27	—	0.44
Play button	Manual	0.4	1.2	—	1.6
This part is a candidate for redesign (part code 84000)					
4	Auto	0.34	0.22	—	0.56
Play spring	Manual	1.6	0.4	—	2.0
5	Auto	0.11	0.27	—	0.38
Plastic retainer	Manual	2.8	1.2	—	4.0
6	Auto	0.11	0.22	—	0.33
Metal disk	Manual	0.4	0.4	—	0.8
7	Auto	0.22	0.22	—	0.44
Magnet gear	Manual	1.2	0.4	—	1.6
This part is a candidate for redesign (part code 02001)					
8	Auto	0.56	0.22	—	0.78
Plastic washer	Manual	1.6	0.4	—	2.0
This part is a candidate for redesign (part code 00050)					

PRODUCTS intended for robotic assembly can be analyzed in much the same way as those intended for manual assembly or automatic assembly. The product is assembled, and each part or subassembly in the product is analyzed to determine the cost and time required to add it to the assembly. In addition, the part is examined to see whether it must be separate, or whether it can be eliminated or combined with some other component. The results guide redesign, indicating where additional effort is most likely to cut production cost.

The economic analysis* that indicates whether manual, automatic, or robotic assembly is likely to be most economical can be shortened and made easier with the aid of newly developed computer programs. The design analysis of products intended for manual or automatic assembly has also been computerized. However, design analysis of robotically assembled products must still be carried out by paper and pencil.

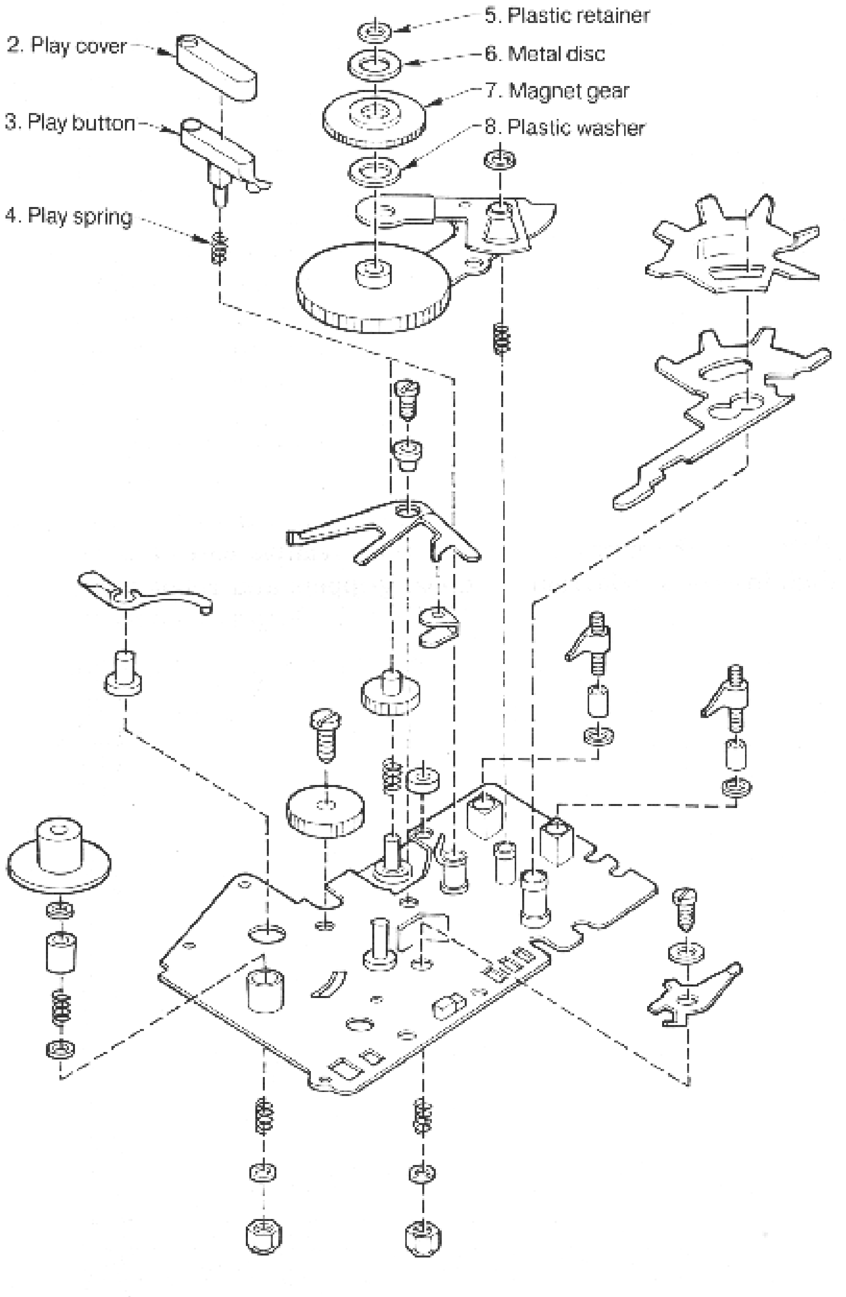

TAPE PLAYER
CHASSIS

Product analysis

The analysis system shows the effect of design decisions on the cost of robotic assembly. The system can be updated easily, so that changes in the cost, speed, or cycle time can be factored into the analysis.

The robot used as the basis for cost comparisons has two arms, each with four degrees of freedom. These are X, Y, and Z, translations and a wrist rotation about the Z axis, which is at right angles to the work fixture. Wrist rotation is essential to enable the robot to orient rotational parts about their axes of insertion.

The relative cost of the robot arms needed to assemble a particular product is then determined by the difficulty of the insertions. It is affected mainly by the degrees of freedom needed to carry out the insertion.

In the analysis, a relative robot cost A_r is assigned to each separate insertion operation. The extra cost of special grippers or tools, A_g, is then added to the largest value of A_r.

Time estimates are made under the assumption that the assembly system has enough compliance to facilitate part insertions. The compliance may be built into the robot wrist, the work fixture, or both. Also, either the robot gripper or the work fixture is assumed to have sensors that detect the presence of parts and verify insertion. With these capabilities, stoppages caused by faulty parts do not present the major problems often encountered with dedicated automatic

---

*A detailed manual procedure for selecting the least costly assembly process was presented in "Design for Assembly: Selecting the Right Method," MD, Nov. 10, 1983, p. 94. Design techniques for manual and automatic assembly were offered in "Design for Assembly: Manual Assembly," MD, Dec. 8, 1983, p. 140, and "Design for Assembly: Automatic Assembly," MD, Jan. 26, 1984, p. 87.

assembly systems and need not be included in time estimates.

The present generation of robot arms typically takes 3 s to move, grasp, orient, return to the work fixture, and insert a part. Normally one robot arm inserts a part while the other grasps and moves the next part. The minimum time between part insertions is thus 1.5 s. To allow for delays caused by interactions between the arms, the analysis assumes that the system time T_p for assembling a part with no assembly problems is 2 s.

To carry out a gripper change, insert a part, and return to the original gripper, one arm typically spends 9 instead of 3 s. In the worst case, the other arm will only insert one part during this time. Thus, two parts have been added in 9 s instead of the usual 4 s. In the best case, the other arm inserts two parts during the course of the gripper change. To accommodate these extremes, an average time penalty $T_g = 4$ s is used in the analysis, giving a total of 6 s per part instead of 2 s.

In many assembly operations one part must be held down while the next part is added. If one robot arm must hold down a part while the other inserts a second part, then the system time for one part is lost. In general, then, if both arms are required, the system time for that part is 4 s.

Example

To see how this system works in practice, consider the example of a small pneumatic piston. Parts are numbered in reverse order of assembly, so entry on the worksheet starts with the highest numbered part.

In the first column, enter the identification number of the part. In the second, enter the number of times the insertion operation is repeated.

Next, determine the appropriate two-digit insertion code from the Robotic Insertion Chart and enter it in Column 3. The chart gives relative robot cost A_r, additional relative cost A_g, system time for the operation T_g, and the time penalty for a tool or gripper change T_p. These values are entered in Columns 4 through 7, respectively.

Determine total system time for the operation by multiplying the numbers in Columns 2 and 6, and then adding the number in Column 7. Enter this value in Column 8.

If the part must be separate, enter one in Column 9; if not, enter zero. To be judged a separate part, it must move with respect to all parts already assembled, must be made of a different material or require isolation from all parts already assembled, or must be separate for reasons of assembly or disassembly.

When these nine columns have been completed for every part or subassembly in the product, total assembly cost and design efficiency can be calculated. Add the numbers in Column 8 to find estimated total assembly time, T_a. Add the numbers in Column 6 to find total relative cost of additional grippers and robot tools, A_g. Take the largest number in

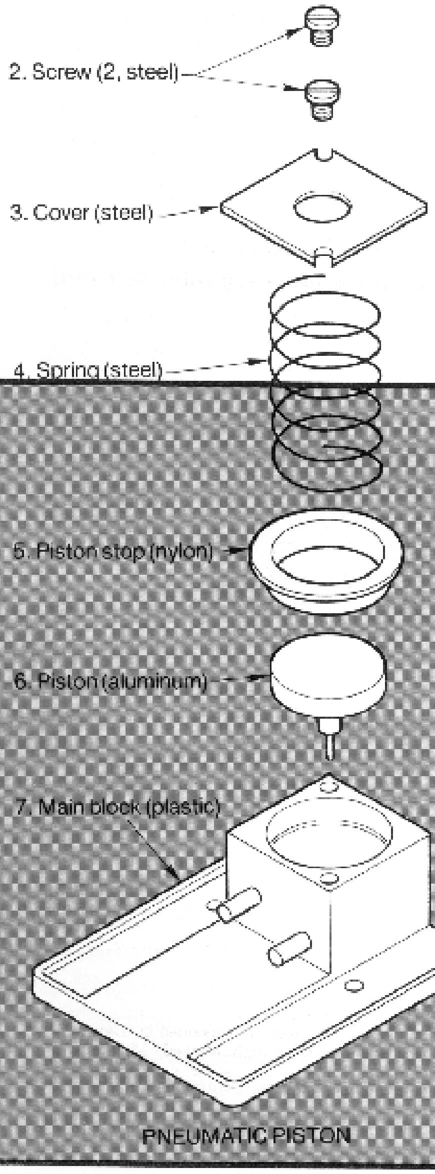

1	2	3	4	5	6	7	8	9	Name of assembly
Part No.	Number of times operation is carried out consecutively	Robot insertion code	Relative robot cost, A_r	Additional relative cost, A_g	System operation time	Time penalty for gripper or tool changes	Total system time	Figures for estimating theoretical minimum no. of parts	Pneumatic piston
7	1	00	1	0	2	0	2	1	Main block
6	1	20	1	0.05	2	4	6	1	Piston
5	1	00	1	0	2	0	2	1	Piston stop
4	1	00	1	0	2	0	2	1	Spring
3	1	02	1	0	4	0	4	0	Cover
2	2	42	1	0.05	2	4	8	0	Screw
			1	0.1			24	4	100,000
			A_{rmax}	A_r			T_a	N_m	Total batch size, T_b

The design efficiency of this pneumatic piston is 26% for robotic assembly. The low rating stems from the use of seven parts instead of the theoretical minimum of four, and the fact that four of the parts in the present design are difficult to assemble robotically.

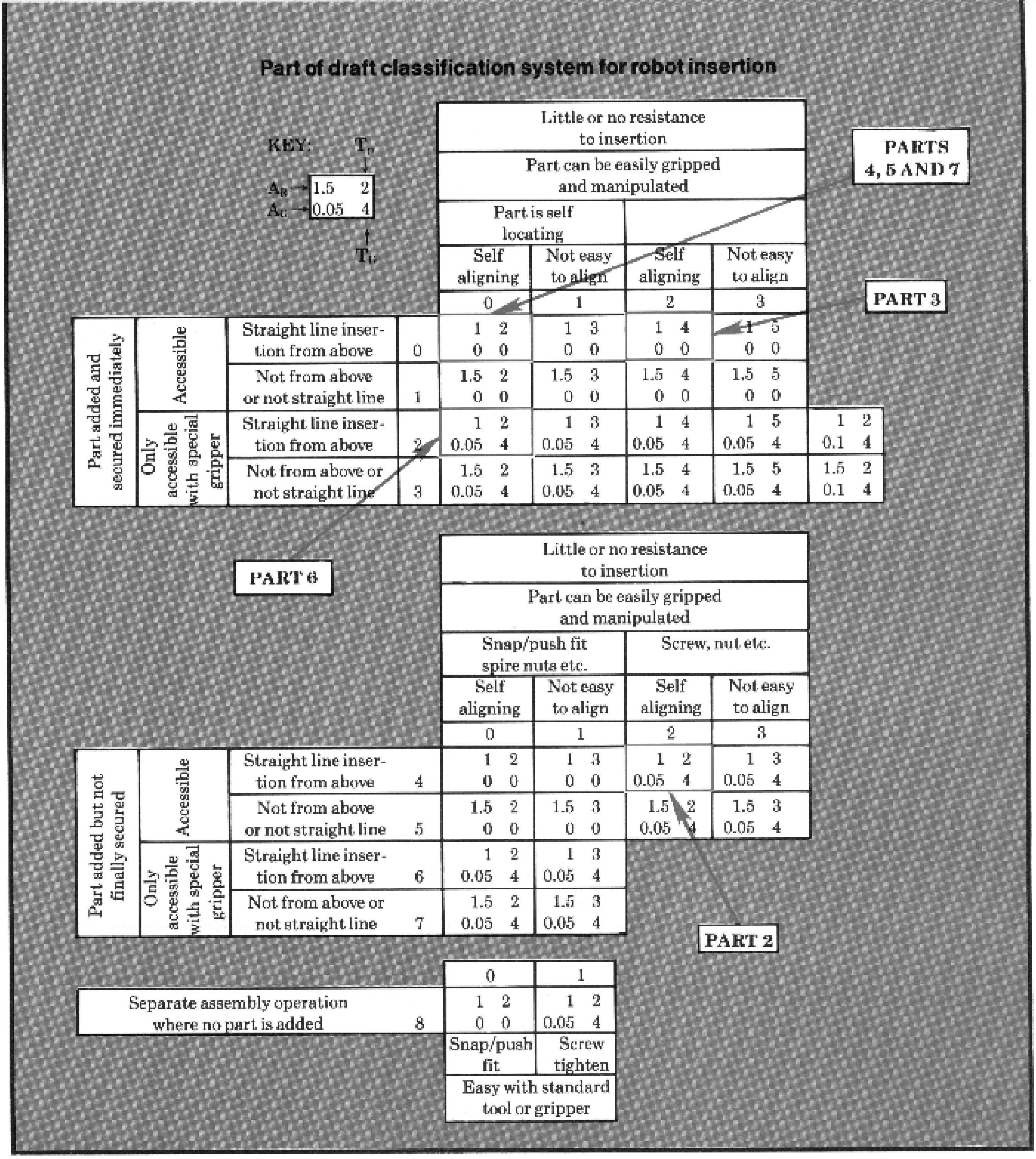

Part of draft classification system for robot insertion

KEY: A_R → 1.5, T_R → 2; A_G → 0.05, T_G → 4

				Little or no resistance to insertion				
				Part can be easily gripped and manipulated				
				Part is self locating				
				Self aligning	Not easy to align	Self aligning	Not easy to align	
				0	1	2	3	
Part added and secured immediately	Accessible	Straight line insertion from above	0	1 2 0 0	1 3 0 0	1 4 0 0	1 5 0 0	
		Not from above or not straight line	1	1.5 2 0 0	1.5 3 0 0	1.5 4 0 0	1.5 5 0 0	
	Only accessible with special gripper	Straight line insertion from above	2	1 2 0.05 4	1 3 0.05 4	1 4 0.05 4	1 5 0.05 4	1 2 0.1 4
		Not from above or not straight line	3	1.5 2 0.05 4	1.5 3 0.05 4	1.5 4 0.05 4	1.5 5 0.05 4	1.5 2 0.1 4

				Little or no resistance to insertion			
				Part can be easily gripped and manipulated			
				Snap/push fit spire nuts etc.		Screw, nut etc.	
				Self aligning	Not easy to align	Self aligning	Not easy to align
				0	1	2	3
Part added but not finally secured	Accessible	Straight line insertion from above	4	1 2 0 0	1 3 0 0	1 2 0.05 4	1 3 0.05 4
		Not from above or not straight line	5	1.5 2 0 0	1.5 3 0 0	1.5 2 0.05 4	1.5 3 0.05 4
	Only accessible with special gripper	Straight line insertion from above	6	1 2 0.05 4	1 3 0.05 4		
		Not from above or not straight line	7	1.5 2 0.05 4	1.5 3 0.05 4		

		0	1
Separate assembly operation where no part is added	8	1 2 0 0	1 2 0.05 4
		Snap/push fit	Screw tighten
		Easy with standard tool or gripper	

Column 4 as the relative robot cost, A_r. Add the number of parts in Column 9 to find the theoretical minimum number of parts, N_m. Find total cost per assembly from

$$C_t = [C_a A_r C_r T_a + (C_a A_g + D_f)]10^5/T_b \text{¢}$$

For the pneumatic piston, the worksheet gives $A_r = 1$, $A_g = 0.1$, and $T_a = 24$. Total batch size $T_b = 100{,}000$. Reasonable values for the other parameters are $C_a = 150$, $C_r = 0.003$, and $D_f = 7$. This gives a total cost per assembly of $C_t = 32.8$¢.

The theoretical minimum number of parts is the sum of the figures in Column 9 of the worksheet, so $N_m = 4$. The "ideal" design for the present generation of robot assembly systems has this minimum number of parts. Each of these parts can be assembled in the basic system time of 2 s and none requires a special gripper or tool. The cost of this ideal design is therefore

$$C_i = (2C_a C_r N_m + D_f)10^5/T_b \text{¢}$$

If $1,000 per part is allowed for magazines and $1,000 for work fixtures, then $D_f = 5$ for the ideal design of the piston, and the minimum cost is $C_i = 8.6$¢.

The design efficiency is the ratio of assembly costs for actual and ideal designs, or 26%. Most of the reasons for this low efficiency rating are evident from the worksheet. The assembly contains seven parts instead of the theoretical minimum of four. Of these seven parts, four present problems in robot assembly. The piston requires a special gripper. The screws necessitate a tool change, and the cover is difficult to align and needs holding down.

In this example, the cost of using dedicated robot tools, magazines, and work fixture is 22¢ for the original design (67% of the assembly cost) and 5¢ for the ideal design (58% of total assembly cost). These percentages are reasonably typical of present robotic systems, and suggest that the development of versatile parts-presentation devices has the potential for large savings in robotic assembly. However, even without such devices, the figures also suggest that the 24.2¢ savings available from improved product design far outweigh the 17¢ savings available from improved manufacturing systems.

Aids to analysis

The major barrier to design-for-assembly analysis is usually time. Design schedules are already so tight that additional analysis is precluded. A recently developed set of friendly software aids for use with common microcomputers eases this time pressure. The set consists of six separate discs available for either the Apple II Plus or the IBM personal computer.

The first program deals with the economics of assembly, as described in the first article in this series. However, the program is fully interactive, so that the user has access to the data base and can put in production volumes, operator costs, product descriptions, and payback periods that are appropriate to his own company. The assembly systems covered in the program represent current industrial practice, and can be classified as manual, special-purpose automatic, or programmable systems. The program prints out the production cost for the product under each of the six basic assembly systems. It also generates a set of graphs showing how cost varies with production volume.

This program quickly shows whether a particular product is likely to cost less if it is assembled manually, automatically, or robotically. If manual or automatic assembly is least costly, the product can be analyzed with available software. Design analysis software for robotic assembly is not yet available.

The Design for Automatic Assembly and Design for Manual Assembly programs essentially automate the manual design procedures described in the second and third articles in this series. Because of space limitations, the discussion is limited to the automatic-assembly program.

Before running the program, users should obtain an exploded view of the assembly or the actual assembly, if it already exists. The assembly is then taken apart, and the name of each part or subassembly is entered in turn. For each entry, the computer requests the securing method if any, and whether the assembly needs to be reoriented to allow the part to be removed.

After the complete parts list is built in this way, the computer prompts the user for additional information on each part. The first properties checked are those that would cause difficulty in feeding the part. Such properties include nesting, tangling, and fragility. When such properties are noted, the system allocates an appropriate feeder-cost penalty to the part.

To establish the cost of orienting each part, the user is first asked to select the shape of its basic envelope. Overall dimensions are then requested, followed by the degree of symmetry about each principal axis. Suitable features must be present for the part to be oriented automatically, so the computer displays menus and requires orientation features to be identified.

These processes establish a classification code for each part. The computer then uses the codes to find feeding efficiencies and relative feeder costs. Similar processes establish insertion codes and costs.

Finally, the user is asked to apply three criteria to each part in order to decide whether it should be considered for elimination or combination with other parts. This information establishes the theoretical minimum number of parts for the assembly.

The user is not asked whether such eliminations or combinations are technically feasible, because this is a subjective judgement to be made after the analysis is complete. However, the user should realize that every part in a product requires assembly. Small, inexpensive, and seemingly insignificant parts such as fasteners often cost much more to assemble than larger, more complex parts. Such small items are often overlooked, yet they frequently account for much of total product cost.

Finally, the computer displays for each part both manual and automatic assembly costs. It also indicates, when appropriate, that automatic assembly of a part is not feasible, or that the part is a candidate for elimination or redesign. A cost summary for the whole assembly is also displayed. Naturally, the results are available as printouts as well as displays. MD

Nomenclature

A_g = Additional relative cost for special tools and grippers
A_r = Relative robot cost
C_a — Cost of standard assembly robot with two arms, each having four degrees of freedom and equipped with versatile grippers, k$
C_i — Cost per assembly for ideal design, ¢
C_r — Cost of using nondedicated equipment of unit value $1,000, ¢/s
C_t — Cost per assembly for actual design, ¢
D_f = Total cost of parts magazines and work fixtures used with the assembly system, k$
N_m — Theoretical minimum number of parts
T_a — Total assembly time per unit, s
T_b = Total batch size to be assembled
T_g — Time penalty associated with changing grippers or special tools, s
T_p — Assembly time for the operation, s

This article is largely based on the *Design for Assembly Handbook*, which has been developed by Boothroyd and Dewhurst at the University of Massachusetts. The handbook is available from Professor Boothroyd, Automatic Assembly Program, Department of Mechanical Engineering, Univ. of Mass., Amherst, MA 01003. (413) 545-0054.

To order additional copies of this book, write to:

Penton/IPC Education Division
Penton Plaza
1111 Chester Avenue
Cleveland, Ohio 44114

or call toll-free 1-800-321-7003
(In Ohio call collect 216/696-7000)